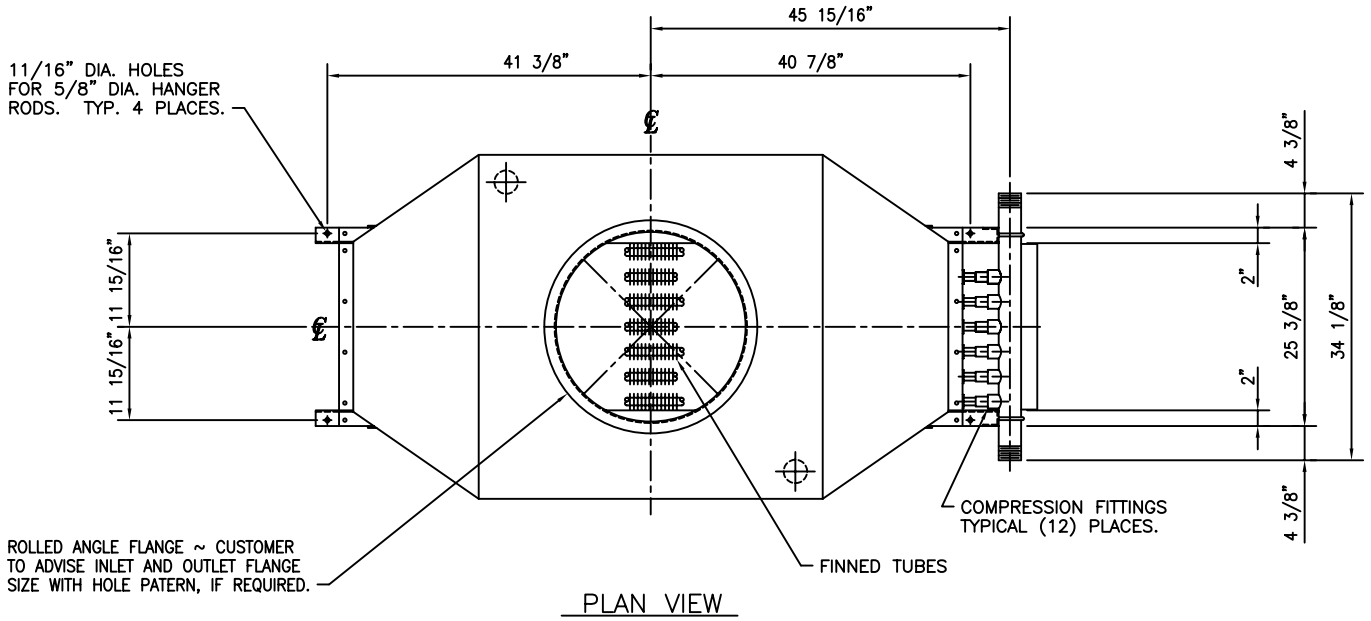

PLAN VIEW

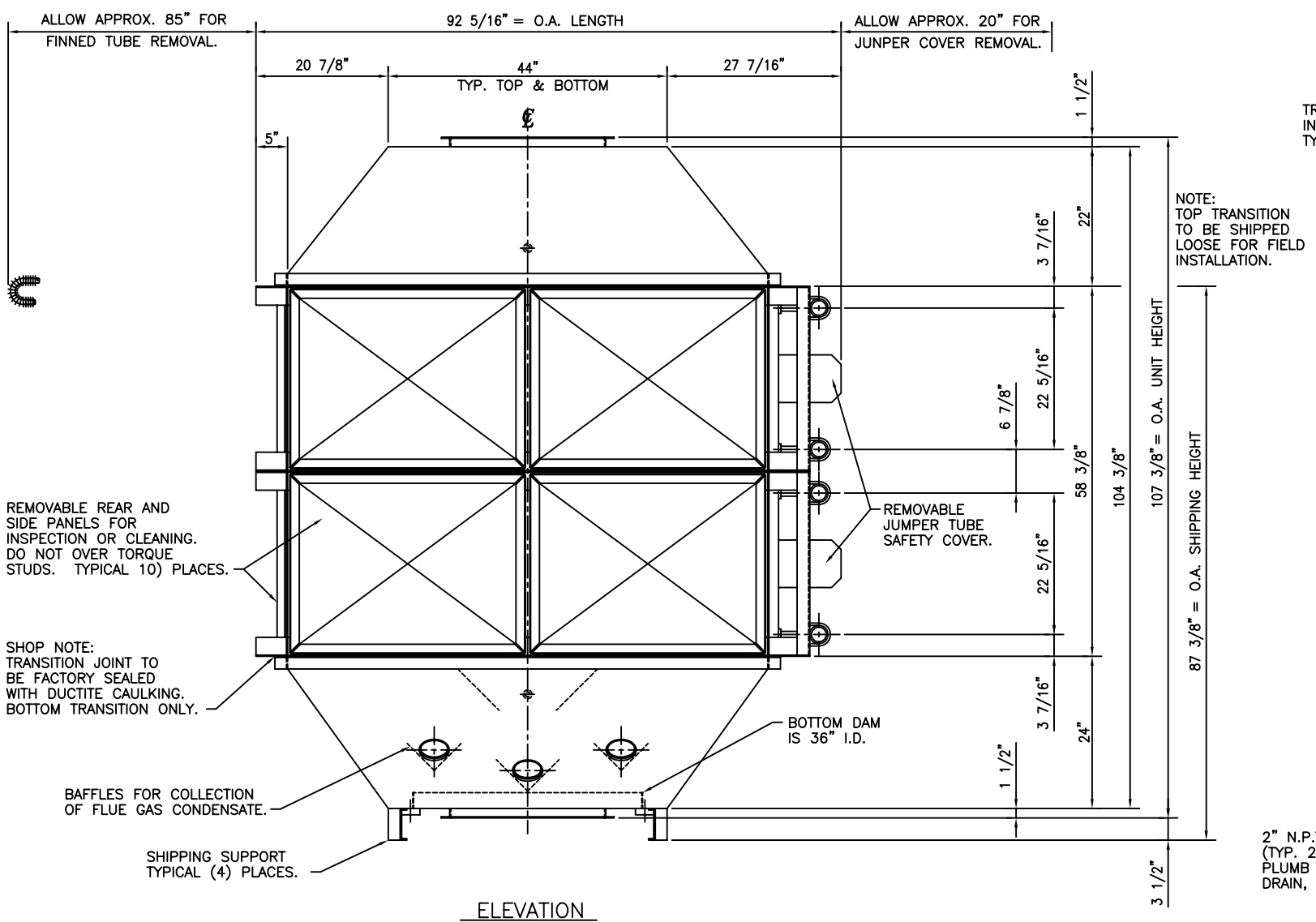

ELEVATION

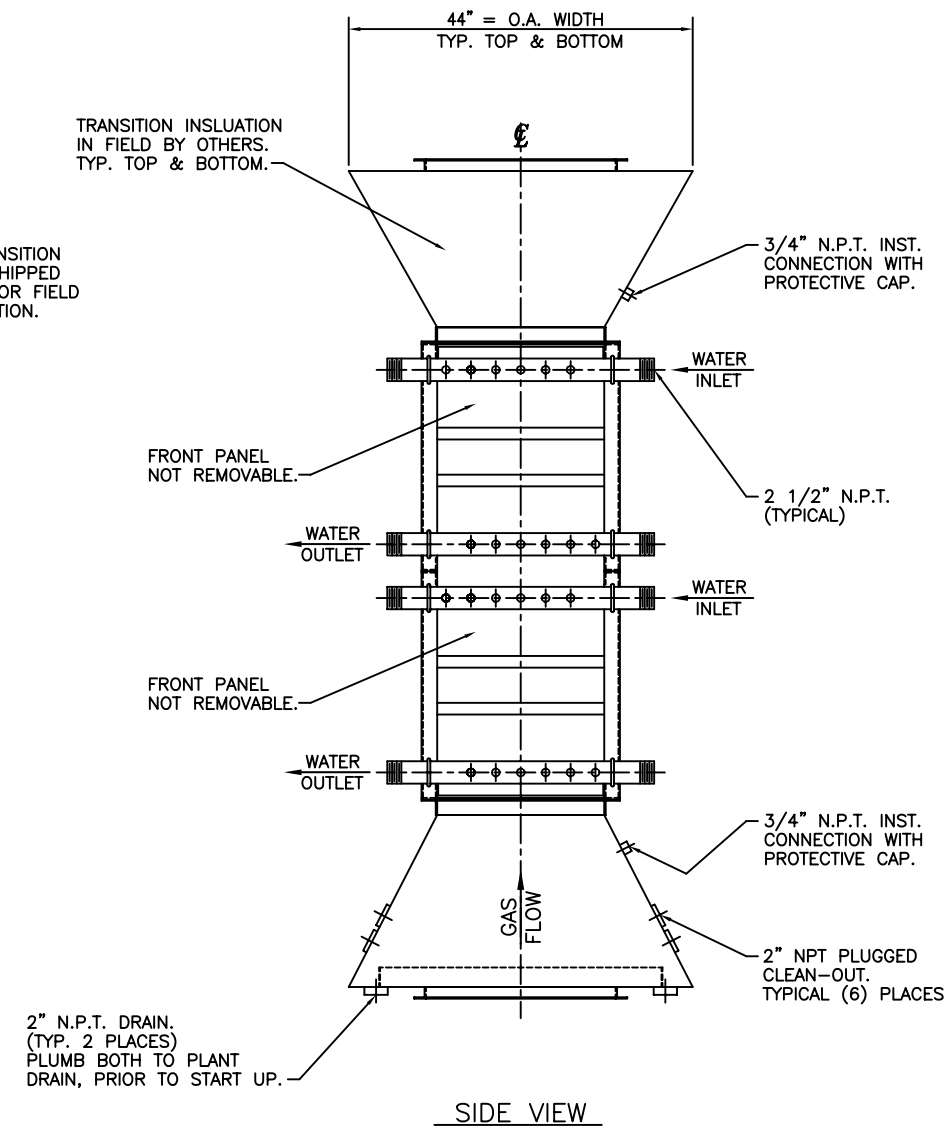

SIDE VIEW

DESIGN DATA	
UNIT SIZE: F4J-6	
DESIGN PRESSURE: 450 PSI @ 650°F	
A.S.M.E. SECTION VIII, DIVISION 1, "U" STAMP	
UNIT WEIGHTS- LBS.	
DRY:	4,530
WET:	4,650
TRANSITIONS:	810
TOTAL WET:	5,460
UNIT CONSTRUCTION	
TUBE MATERIAL:	
FIN MATERIAL:	
HEADER MATERIAL:	
OPERATING PRESSURE:	

GENERAL NOTES

1.) REFER TO OPERATION AND MAINTENANCE MANUAL FOR INSTALLATION.
2.) BAFFLES AND DAM FOR COLLECTION OF FLUE GAS CONDENSATE SHOWN IN PHANTOM IN ELEVATION VIEW.
3.) TRANSITIONS TO BE INSULATED IN FIELD BY OTHERS.
4.) UNIT NOT DESIGNED FOR STACK LOADING.
5.) EXTERNAL PIPING NOT TO INDUCE ANY LOADS ON THE ECONOMIZER HEADER CONNECTIONS.

OPTIONS SUPPLIED BY C.B.W.

1.)
2.)
3.)
4.)
5.)

CANNON BOILER WORKS, INC.
510 CONSTITUTION BLVD. NEW KENSINGTON, PA.15068

CUSTOMER:

REPRESENTED BY:

GENERAL ARRANGEMENT DRAWING
OF FEEDWATER HEATER
MODEL: F4J-6

FILE NAME:

DRAWN BY:	DATE COMPLETE	CHECKED BY:	DATE CHECKED
RDM			
SCALE	JOB NUMBER	DRAWING NUMBER	REV
1"=1'	1000	D-1000-1	A